ORDINANCE 19-23

AN ORDINANCE AMENDING TITLE 21 OF THE SANDY CITY MUNICIPAL CODE: CHAPTER 15, "SENSITIVE AREA OVERLAY ZONE", CHAPTER 20, "RESIDENTIAL DEVELOPMENT STANDARDS", CHAPTER 21, "SUBDIVISION DESIGN STANDARDS", CHAPTER 24, "COMMERCIAL AND INDUSTRIAL DEVELOPMENT STANDARDS", AND CHAPTER 37, "DEFINITIONS" TO ALLIGN THE CITY'S REGULATIONS WITH THE RECENTLY ADOPTED FIRE CODE APPENDICES; ALSO PROVIDING A SAVING CLAUSE AND EFFECTIVE DATE FOR THE ORDINANCE.

WHEREAS, Sandy City Council adopted and enacted a codification of the general ordinances of Sandy City entitled "Sandy City Municipal Code" by adoption of Ordinance 19-24, which ordinance shall become effective upon publication; and

WHEREAS, a request has been made to amend Title 21 of the Sandy City Municipal Code (formerly Title 15A of the Revised Ordinances of Sandy City), Chapter 15, "Sensitive Area Overlay Zone", Chapter 20, "Residential Development Standards", Chapter 21, "Subdivision Design Standards", Chapter 24, "Commercial and Industrial Development Standards", and Chapter 37, "Definitions" to align our regulations with the recently adopted Fire Code Appendices; and

WHEREAS, the Planning Commission held a public hearing on October 3, 2019 which meeting was preceded by notice by publication in the Salt Lake Tribune on September 19, 2019, and by posting in Sandy City Hall, the Sandy City Parks & Recreation Building, Salt Lake County Library-Sandy, on the Sandy City Website - http://www.sandy.utah.gov, and the Utah Public Notice Website - http://pmn.utah.gov on September 17, 2018; and

WHEREAS, following the public hearing before the Planning Commission, the Commission recommended the amendment to the City Council; and

WHEREAS, a public meeting was held by the Sandy City Council on October 8, 2019 to consider adoption of the proposed amendment, which meeting was preceded by publication in the Salt Lake Tribune, on September 19, 2019, and by posting in Sandy City Hall, the Sandy City Parks & Recreation Building, Salt Lake County Library-Sandy, on the Sandy City Website - http://www.sandy.utah.gov, and the Utah Public Notice Website - http://pmn.utah.gov, on September 17, 2019; and

WHEREAS, the City Council has been given specific authority in Title 10, Chapter 9a, Utah Code Ann. to adopt a zoning plan, including an ordinance and map which divide the municipality into districts or zones, and within such districts to regulate the erection, construction, reconstruction, alteration, repair and uses of buildings and structures, and the uses of land; and

WHEREAS, the State legislature has granted general welfare power to the City Council, independent, apart from, and in addition to, its specific grants of legislative authority, which enables the City to pass ordinances which are reasonably and appropriately related to the objectives of that power, i.e., providing for the public safety, health, morals, and welfare; and

WHEREAS, the foregoing legitimate governmental objectives are achieved by reasonable means, in that any adverse impact on private property value or use has been carefully balanced against the corresponding gain to the public; and the regulations have been calculated, on

recommendation of City planning staff to permit property owners to beneficially use their properties for the practical purposes to which the property is reasonably adaptable; and procedures have been established by the Land Development Code and Utah Code Ann. whereby appeals can be heard and decided if it is alleged that there is legislative or administrative error, or where a special exception or variance to the ordinance is required.

NOW, THEREFORE, BE IT ORDAINED by the City Council of Sandy City, State of Utah, as follows:

Section 1. Amendment. Title 15A is amended as shown on **Exhibit "A"**, which is attached hereto and by this reference made a part hereof.

Section 2. Severable. If any part of this ordinance or the application thereof to any person or circumstances shall, for any reason, be adjudged by a court of competent jurisdiction to be unconstitutional or invalid, such judgment shall not affect, impair or invalidate the remainder of this ordinance or the application thereof to other persons and circumstances, but shall be confined in its operation to the section, subdivision, sentence or part of the section and the persons and circumstances directly involved in the controversy in which such judgment shall have been rendered. It is hereby declared to be the intent of the City Council that this section would have been adopted if such invalid section, provisions, subdivision, sentence or part of a section or application had not been included.

Section 3. Effective. This ordinance shall become effective upon publication of a summary thereof or upon the effective date of Ordinance 19-24, whichever later occurs.

PASSED AND APPROVED this 8th day of OCTOBER, 2019.

Linda M. Saville

~~Chris McCandless~~, Sandy City Council
Acting Chair

ATTEST:

City Recorder

PRESENTED to the Mayor of Sandy City for his approval this 14TH day of OCTOBER, 2019.

APPROVED this 14TH day of OCTOBER, 2019.

Kurt Bradburn, Mayor

ATTEST:

DEPUTY City Recorder

PUBLISHED this 18 day of October, 2019.

SANDY CITY, UTAH INCORPORATED 1893

Exhibit "A"

The following are the proposed changes to the Land Development Code (clean). The proposed changes are shown as though the City Code has been readopted and the Municode system is in place, rather than updating and amending the current code. With the update to Municode, the Land Development Code is now under Section 21 of the City Code. There are also difference in style and formatting so numbering and labeling of subsections are different. Below is a cross reference guide between the current and the proposed section references:

Chapter Name	Current Section Reference	Municode Section Reference
Land Development Code	Title 15A	Title 21
Sensitive Area Overlay Zone	Chapter 15A-15	Chapter 21-15
Residential Development Standards	Chapter 15A-20	Chapter 21-20
Subdivision Design Standards	Chapter 15A-21	Chapter 21-21
Parking, Access and Circulation Requirements	Chapter 15A-24	Chapter 21-24
Definitions	Chapter 15A-37	Chapter 21-37

(3) *Development Requirements.* To be approved, a planned unit development project must show a high commitment to excellence, ensuring better quality of life for future tenants and be compatible with adjacent residential areas. The following are required for all planned unit development projects:

a. *Ownership.* The development shall be in single or corporate ownership at the time of application or the subject of an application filed jointly by all owners of the property.

b. *Open Space.* Unless otherwise approved by the Planning Commission, common and private open space shall be provided and shall not cover less than 40 percent of the gross site area. The required open space shall be land areas that are not occupied by buildings, structures, parking areas, streets, or alleys and shall be accessible by the residents. Said open space shall be devoted to landscaping, preservation of natural features, patios, and recreational areas. Private open space (that provided for each dwelling unit for personal use) shall be located immediately adjacent to, attached to, or within the dwelling unit it is designed to serve and shall be for the exclusive use of the residents of the dwelling unit. Common open space may be distributed throughout the planned unit development and need not be in a single large area. Landscaped roof areas or decks attached to individual units may not be calculated as part of required common open space. Open space within a Sensitive Area Overlay Zone shall require conditional use approval. These areas may include, but are not limited to, 30 percent or greater slope areas, fault zones, floodplains, high water table, and wetlands. These areas may only be included as open space when they have been designed as an integral part of the project.

c. *Interior Streets.* The design of public and private streets within a planned unit development shall follow City standards for width of right-of-way and construction. Existing City standards of design and construction may be modified as allowed in this code. The interior street system in an entire planned unit development project shall be dedicated to the City as a utility easement. All private streets shall be conveyed to a private association. The original developer/builder will also be required to establish a City-approved road maintenance fund for all private streets. This provision will be required in the CC&Rs for all projects with a private street system.

d. *Parking.* The minimum parking requirements outlined in this code shall be adhered to except as allowed herein.

1. All parking areas, covered or open, shall have a landscaped buffer adjacent to any public right-of-way.

2. There shall be no less than 1.5 covered parking spaces (1.0 carports, 0.5 garages) per unit. The Planning Commission may consider the following criteria in determining whether or not the number of garages/carports should be increased or reduced:

(i) The topography of the proposed site.

(ii) To enhance and protect local property values of adjacent developments and neighborhoods.

(iii) To improve the overall appearance of the development for the density of units (e.g., attached garages and underground garages).

(iv) Review the location of all garages and may require that they be attached or underground for the multifamily units. All covered parking shall be placed in locations adjacent and convenient to the buildings that they are intended to serve.

(v) To assist the project in reaching affordable rent levels for low and moderate income individuals as determined by the U.S. Department of Housing and Urban Development.

(vi) Garages shall be used for vehicle parking only.

(vii) Tandem spaces shall be counted only as one space.

e. *Building Materials.* Building materials, roofing materials, and building design shall be reviewed and approved by the Planning Commission. High-quality exterior materials shall be used, including brick, stone, synthetic stucco, prefinished panel, composite materials, or other materials of similar quality, durability, and low maintenance.

f. *Landscaping on Public Right-of-Way.* Where a planned unit development is adjacent to a public right-of-way, a permanent open space at least ten feet in width shall be required along the property lines. This area shall be kept free of buildings and structures (except fences as approved by the Planning Commission) and permanently maintained in street trees and other landscaping, screened or protected by natural features, or as approved by the Planning Commission.

g. *Exterior Fencing.* Exterior fencing shall be provided as approved by the Planning Commission. Acceptable fencing materials include architecturally-designed brick or block fences, wrought iron fences, post and rail fences, vinyl fences, pre-cast concrete, or structural wood fences with square metal posts with tongue-in-groove redwood siding and redwood for all other wood members. Additional landscape buffers may also be required with the width and landscaping specifications as determined by the Planning Commission.

h. *Street Lights.* Appropriate street lighting is required. If the streets are to be dedicated to the public, the lights shall comply with the City's Street Light Plan. If the streets are private, the lights may be altered, but must be approved by the Planning Commission. The applicant shall submit a plan which indicates the type and location of street lights in relation to the proposed site landscaping.

(4) *Development Standards.*

a. *Required Elements.* Residential developments shall be guided by a total design plan in which the following development standards may be varied to allow flexibility and creativity in site design, building design, and location. The Planning Commission may require such arrangements of structures, open spaces, landscaping, buffering, and access within the site development plan as they determine appropriate. The Commission may require specific setbacks, a lower residential density, and a height limitation. This criteria shall be used by the Planning Commission principally to ensure the design objectives in this section of this chapter are met.

1. *Feasible Development.* A planned unit development shall be of sufficient size, composition, and arrangement to enable its feasibility as a complete development.

2. *Density.* The density allowed for a planned unit development shall be no greater than the zone in which it is located.

3. *Site Calculations.* Specific calculations addressing the percentage of open space (common and private), impervious versus pervious coverage, and site improvements must be submitted with all project applications.

4. *Lot Requirements.* No specific yard, setback, or lot size requirement shall be imposed in the planned unit development. However, the purpose and objectives of this section must be complied with in the final development plan. The Planning Commission may require certain setbacks within all or a portion of the planned unit development.

5. *Traffic Circulation.* Points of primary vehicular access to the planned unit development shall be designed to provide smooth traffic flow with controlled turning movements and minimum hazards to vehicular, pedestrian, and bicycle traffic. Minor streets within the planned unit development shall not be connected to streets outside the development in such a manner as to encourage their use by through traffic. Adequate emergency vehicle access shall be provided.

6. *Driveways and Alleys.* A private driveway or alley must comply with all established standards in this code.

7. *Privacy.* Each planned unit development shall provide reasonable visual and acoustical privacy for dwelling units. Fences, insulation, walks, barriers, landscaping, and sound-reducing construction techniques shall be used as appropriate for the aesthetic enhancement of the property, the privacy of its occupants, the screening of objectionable views or uses, and the reduction of noise.

8. *Noise Attenuation.* When, in the opinion of the Director, a proposed planned unit development may be situated in a noisy environment which will adversely affect the peace, tranquility, and privacy of its inhabitants or surrounding inhabitants, an acoustical analysis may be required. Said analysis shall be conducted by a qualified acoustical engineer and include a description of the noise environment and the construction or other methods necessary to attenuate the noise to the required level according to the noise standards of Chapter 13-2.

9. *Security.* The development shall be designed to support security services, taking into account public safety recommendations from the Police Department.

10. *Pedestrian and Bicycle Paths.* Where appropriate, the internal circulation system shall provide pedestrian and bicycle paths which may be physically separated from vehicular traffic to serve residential, nonresidential, and recreational facilities in or adjacent to the development. The Planning Commission may require connections to regional trail systems, activity centers, pedestrian and/or bicycle overpasses, underpasses, or traffic signalization in the vicinity of schools, playgrounds, parks, shopping areas, or other uses that will receive considerable pedestrian and/or recreational trails use from the development.

(7) *Streets and Ways.* Streets, roadways, and private streets, lanes and driveways shall follow as nearly as possible the natural terrain minimizing cuts and fills. In addition to the standards identified in Chapter 21-21, the following additional standards shall apply:

a. Access easements shall be provided to all adjoining developed and non-developed areas for emergency and firefighting equipment when determined necessary by the Fire Marshal. Driveways located upon each lot extending beyond 150 feet from a public or private street may be deemed a Fire Department access road, as determined by the Fire Marshal, and must follow the design requirements of a private lane.

b. A cul-de-sac is permitted up 750 feet in length. It may exceed 750 feet in length through a special exception reviewed by the Planning Commission. This request to extend the length of the cul-de-sac requires a recommendation from the Director and City Engineer. The following shall be evaluated in reviewing the special exception:

1. Based upon the subject property's geographical constraints, it can be demonstrated that extending the road would better accomplish the stated purposes of this chapter.

2. It can be demonstrated that public safety will be improved above existing conditions.

c. Variations of the street design standards developed to solve special visual aesthetics and functional problems may be presented to the Planning Commission upon recommendation from the City Engineer for consideration and approval. Examples of such variations may be the use of split roadways to avoid deep cuts, one-way streets, modifications of surface drainage treatments, sidewalk design, or the extension of a cul-de-sac.

d. Development sites which are located near canyon trails shall provide access to those trails. Parking areas at trailheads may be required by the Planning Commission.

e. The maximum amount of impervious surface for streets and roadways shall not exceed 20 percent of the entire development site.

f. The maximum grade of all streets or rights-of-way for vehicle traffic shall be 10 percent, unless permitted by the City Engineer and Fire Marshal.

CHAPTER 21-21. - SUBDIVISION DESIGN STANDARDS[3]

Footnotes:
--- (**3**) ---
State Law reference— Subdivision regulations, U.C.A. 1953, § 10-9a-601 et seq.

Sec. 21-21-1. - Purpose.

The purposes of this chapter are:

(1) To promote the health, safety and general welfare of the residents of Sandy City.

(2) To provide for the orderly development of the City, with adequate provisions for traffic, light, air, recreation, transportation, water, drainage, sewage, and other public requirements.

(LDC 2008, § 15A-21-01)

Sec. 21-21-2. – General Development Standards.

The standards and improvements required of this chapter shall apply to all development within Sandy City (unless modified or eliminated as allowed herein), whether a subdivision is required or not (e.g. lot of record). All standards found herein shall also be in conformance to the Sandy City Standard Specifications and Details for Municipal Construction (herein known as "Standard Specifications", as adopted by Sandy City. City inspections are required for the installation of all required improvements. If the developer/builder/owner fails to have the City inspection prior to installation, the City Engineer may require remedial action, including, but not limited to, the removal and replacement of the improvements in question.

(LDC 2008, § 15A-21-02)

.

Sec. 21-21-3. - Residential Driveways.

(a) Driveways shall be provided for all residential building lots to access the primary garage. A driveway is not required to access a detached structure. If the access to the structure is used to store vehicles, then the surface must be paved. The drive approach for the driveway shall be a minimum width of 12 feet and shall not exceed the maximum width of 36 feet. A secondary drive approach may be permitted upon review and approval by the City Engineer as permitted in this code.(b) No downsloping driveways shall be permitted unless otherwise approved by the City Engineer due to unusual topographic constraints. The driveway must maintain a positive slope away from the home as required by the International Building Code.

(c) The minimum grade at which a driveway shall be allowed to be built is two percent slope, and the maximum grade at which a driveway shall be allowed to be built is 12 percent slope, except as hereafter provided. The City Engineer, under exceptional circumstances, may approve driveway slopes having a grade exceeding 12 percent and may impose conditions of approval to mitigate any hazards created by the steepness of the driveway.

(d) Residential driveways shall be constructed in compliance with the Standard Specifications.

(e) A driveway that exceeds 150 feet in length may be deemed a Fire Department access road, as determined by the Fire Marshal, and must follow the design requirements of a private lane.

(LDC 2008, § 15A-21-03)

Sec. 21-21-4. - Culinary Water Systems.

(a) The developer shall extend culinary water systems to each lot within a subdivision and shall be in conformance with the Standard Specifications. The developer shall install water lines and laterals throughout the subdivision, extending to the farthest boundaries thereof, or beyond as may be determined by the City as necessary to provide service.

(b) All water utility trenches within Sandy City rights-of-way shall be compacted in conformance with the Standard Specifications. All trenches located outside of Sandy City rights-of-way and located beneath the driveway or within five feet of any public improvement shall be backfilled in 12-inch maximum lifts and mechanically compacted. Backfill and compaction operations shall be certified in writing to the City Engineer by the developer/builder through his licensed professional prior to the City issuing a Certificate of Occupancy. The location of the ends of all water laterals shall be located and marked at the property line by the developer.

(LDC 2008, § 15A-21-04)

Sec. 21-21-5. - Fire Hydrants.

Fire hydrants shall be installed by the developer in accordance with the Standard Specifications, the International Fire Code, and other local ordinances at locations designated by the Fire Department as approved on the City-approved construction drawings. The roadway where a hydrant is located is a fire access road; the minimum roadway width shall be 26 feet within 20 feet of the hydrant.

(LDC 2008, § 15A-21-05)

Sec. 21-21-6. - Sanitary Sewer and Other Utility Systems.

(a) *Construction.*

(1) The developer shall extend sanitary sewer systems to each lot in a subdivision in conformance with the requirements of the responsible sewer district and the Standard Specifications. The developer shall install main sewer lines and laterals throughout the entire subdivision, extending to the farthest boundaries thereof or beyond as determined by the City, or appropriate sewer district to be necessary to provide service.

(2) All sanitary sewer trenches within Sandy City rights-of-way shall be compacted in conformance with the Standard Specifications. All trenches located outside of Sandy City rights-of-way located beneath the driveway or within five feet of any public improvement shall be backfilled in 12-inch maximum lifts and mechanically compacted. Backfill and compaction operations shall be certified in writing to the City Engineer by the developer/builder through his licensed professional prior to the City issuing a Certificate of Occupancy. The developer shall locate and mark at the property line the location of the ends of sanitary sewer laterals. All new dwellings shall connect to proper sanitary facilities. This shall be reviewed as part of the building permit process.

(3) All trenches for utility installation within Sandy City rights-of-way shall be compacted in conformance with the Standard Specifications. All trenches located outside of Sandy City rights-of-way located beneath the driveway or within five feet of any public improvement shall be backfilled in 12-inch maximum lifts and mechanically compacted. Backfill and compaction operations shall be certified in writing to the City Engineer by the developer/builder through his licensed professional prior to the City issuing a Certificate of Occupancy.

(b) *Connection.*

(1) *Mandatory.* The owner or occupant of real property on which a building has been or is being constructed shall connect such building to the sewer system within 60 days after receiving written notice from the District or City that facilities of the sewer system are available for connection to the building, if any part of such facilities of the sewer system are available for connection to the building, or if any part of such facilities is situated within 300 feet of any point of any property line of such property.

(2) *Subsequent Use of Private Systems.* If connection to the sewer system is required pursuant to the previous subsection, the owner or occupant thereby required to connect shall immediately plug any septic tank or privy vault, remove any outhouse, fill with earth any cesspool located on his property, and make no further use of those or any other privately owned facilities for final sewage disposal. Any cesspool, outhouse, or unplugged septic tank or privy vault on property required to be connected to the sewer system is hereby declared to be a public nuisance.

(3) *Construction of Private System.* No person shall construct or cause to be constructed a septic tank or other privately owned means of final sewage disposal on property required to be connected to the sewer system by Subsection (b)(1) of this section.

(4) *Building Approval.* No newly constructed building required to be connected by Subsection (b)(1) of this section shall be issued a building permit approved for human occupancy if such building is not connected to the sewer system.

(5) *Conditions.* Nothing in this part as adopted shall be construed as creating any obligation on the part of the District or the City to connect any property to the Sewer System or retain any connection to the sewer system. The District may impose reasonable conditions and requirements for sewer connection without affecting the obligation of a private person to either connect to the sewer system, discontinue use of a private system, or otherwise comply with this section.

(Revised Ords. 1978, § 18-1-6; LDC 2008, § 15A-21-06)

Sec. 21-21-7. - Drainage Systems.

Surface water runoff drainage systems shall be designed to handle all runoff generated within the subdivision by a ten-year three-hour storm and routing of water generated by a 100-year, 72-hour storm. Such systems shall be designed and installed by the developer according to the Standard Specifications.

(LDC 2008, § 15A-21-07)

Sec. 21-21-9. - Alteration or Relocation of Natural Waterways.

(a) A request for alteration or relocation of a natural waterway shall first be submitted to the City Engineer and Public Utilities Director to ensure the following:

(1) The flow capacity and velocity of the waterway will not change with the proposed alteration or relocation.

(2) The soils conditions in the proposed location will not increase flooding potential.

(3) The proposed waterway can be maintained.

(4) Comply with applicable provisions of the Sensitive Area Overlay Zone.

(b) After approval by the City Engineer and Public Utilities Director, alteration or relocation of any natural waterway shall be submitted and approved by the State Engineer's Office, Army Corps of Engineers (if jurisdictional wetlands are affected), and the Salt Lake County Flood Control Department, or its successor.

(LDC 2008, § 15A-21-09)

Sec. 21-21-10. - Street Standards for All Types.

(a) All roads and roadway features are required to meet minimum geometric design standards established by the American Association of State Highway and Transportation Officials (AASHTO). All street and right-of-way improvements shall be designed and constructed in accordance with the Standard Specifications. All signs, pavement markings, and traffic control signals must meet standards established by the Manual on Uniform Control Devices (MUTCD), and related roadway standards established by state, federal, or local law. Exceptions to applicable State and Federal standards may

be granted by the City Engineer on a case-by-case basis and shall demonstrate innovative superiority or other advantages over existing standards.

(b) The arrangement, character, extent, width, grade, and location of all streets shall conform to the Transportation Master Plan and shall be considered in their relation to existing and planned streets, topographical conditions, public convenience and safety, and in their appropriate relation to the proposed uses of the land to be served by such streets.

(c) Where the Transportation Master Plan does not show proposed streets, the arrangement of streets in a subdivision shall either:

(1) Provide for the continuation or appropriate projection of existing principal streets in surrounding areas (providing for neighborhood connectivity with the purpose of spreading traffic); or

(2) Conform to a plan for the neighborhood approved or adopted by the Planning Commission, after considering a recommendation by the City Engineer, to meet a particular situation where topographical or other conditions make continuance or conformance to existing streets impracticable.

(d) At least two points of ingress/egress shall be provided for each subdivision, PUD, or multifamily project. They shall be located at a distance apart equal to not less than one-half of the length of the maximum overall diagonal dimension of the property area to be served, measured in a straight line between accesses.

(1) *Special Exception.* The Planning Commission may grant a special exception to allow a subdivision to have only one point of ingress/egress, after considering a recommendation from the Director and City Engineer, under the following circumstances:

a. 30 or fewer lots/units are accessed from the single ingress/egress;

b. The Director and City Engineer have reviewed the potential for impairment of such single access resulting from vehicle congestion, condition of the terrain, climatic conditions or other factors that could limit access and have made either a positive or negative recommendation to the Planning Commission with regards to a single point of ingress/egress; and

c. The proposed development project has one or more of the following, as determined and recommended for approval or denial by the Director and City Engineer to the Planning Commission:

1. One or more cul-de-sacs, hammerheads, or other approved turn-arounds that comply with all development standards herein.

2. An emergency access (a point of ingress/egress that provides access for emergency vehicles to respond to a building, or facility, in the event the main access is compromised. The design of this access must meet the International Fire Code).

3. The future extension of a stub street that will provide additional access, including a temporary turn-around.

4. All buildings are equipped throughout with automatic sprinkler systems approved by the Fire Marshal and Chief Building Official.

(e) Stub streets that are longer than 150 feet shall have a temporary turn-around as approved by the City Engineer and Fire Marshal. A temporary turn-around on a public street may include all approved types adopted in the Standard Specifications. The turn-around may be eliminated or repurposed once the stub street is connected as a through street.

(f) Street right-of-way widths shall be as shown on the Transportation Master Plan and, where not shown therein, shall not be less than the following (unless modified by a waiver or special exception as allowed herein):

Street Type	*Right-of-Way Width*
Major arterial	108+ feet
Minor arterial	92 feet
Major collector	82 feet
Minor collector	64 feet
Local	52 feet
Private street	52 feet (27 feet pavement width minimum)
Private lane	20 feet pavement width minimum
Alley	26 feet (20 feet pavement minimum (one-way)) 30 feet (24 feet pavement minimum (two-way))
Pedestrian Mew	26 feet (8 feet pavement width)

(g) Half streets are prohibited.

(1) *Special Exception.* The Planning Commission may grant a special exception to allow less than a full-width dedication and improvements only in the following circumstances:

a. Where it can be shown by the developer that it is essential to the development of the subdivision;

b. All other aspects of the subdivision are in conformance with the other requirements of these regulations;

c. The City Engineer recommends to the Planning Commission that it will be practicable to require the dedication and improvements to the other half when the adjoining property is developed upon reviewing a neighborhood master plan;

d. A minimum pavement width of 20 feet will be required as recommended by the City Engineer; and

e. Conformance with Fire Access Roads requirements.

(h) A cul-de-sac is discouraged, but may be permitted on local streets and shall be terminated by a turn-around of not less than 97 feet in diameter, as measured from top back of curb to top back of curb. This is the only type of permitted termini for a public street. A cul-de-sac shall not exceed 500 feet in length in a residential zone. A cul-de-sac length is measured from its intersection with another street to the end of top back of curb of the cul-de-sac turn-around.

(i) Streets shall be laid out so as to intersect as nearly as possible at right angles. The City Engineer may approve minor deviations of up to 10 degrees.

(j) No street names shall be used which will duplicate the names of existing streets. Street names are subject to the approval of the Salt Lake County.

(k) Local streets shall be laid out to provide neighborhood connectivity so that traffic is distributed out evenly.

(l) Where a subdivision borders on or contains a railroad right-of-way or limited access highway right-of-way, the Planning Commission may require a local access street approximately parallel to and on each side of such right-of-way.

(m) Where a subdivision abuts or contains existing back-facing lots or a proposed arterial or collector street, the Planning Commission may require local access streets, reverse frontage with screen

planting contained in a non-access reservation along the rear property line, deep lots with rear service alleys, or other such treatment as may be necessary for adequate protection of residential properties and to provide separation of thru and local traffic.

(n) Curbs, gutters, parkstrips, and sidewalks shall be required on all existing and proposed public and private street frontage of any lot within a subdivision or legal buildable parcel in conformance with the Standard Specifications. The Planning Commission may grant a special exception to waive any of these improvements, after considering a recommendation from the Director and City Engineer. They shall consider and evaluate the following criteria:

(1) The number of homes within the subdivision;

(2) The length of a cul-de-sac;

(3) The precedence of adjoining improvements;

(4) The configuration of lots;

(5) Where the only other alternative is a private road design;

(6) Flood control and storm drainage;

(7) Pedestrian safety and walkable element demands;

(8) The proposal equitably balances the needs of the public and presents the most efficient use of land;

(9) The potential negative impacts created by the waiver(s); and

(10) The cumulative effect of all the waivers and any other exceptions requested for the development.

(o) The Fire Marshal, Police Chief, and City Engineer are authorized to recommend an approval or denial to the Planning Commission for the installation of security gates across Fire Department access roads if all of the following criteria can be met:

(1) Compliance with theInternational Fire Code.

(2) Gates are placed on private or common area property and must be located at least 20 feet from the public right-of-way.

(3) Gates are not within an area designated as a sight triangle by the City Engineer.

(4) A turn-around shall be provided at the entrance of the gate for passenger cars. This will require a minimum of a 30-foot road width and a 12-foot opening in any potential median prior to the gate.

(5) The minimum gate width shall be 20 feet. When a divided roadway is proposed, the gate width shall not be less than 12 feet.

(6) Gates shall be of the swinging or sliding type.

(7) Construction of gates shall be of materials that allow manual operation by one person.

(8) Gate components shall be maintained and operational at all times and replaced or repaired when defective. Should the gate not be operational, the gate shall be left in an open position or removed until it can be certified by the Fire Marshal through an independent vendor that it functions properly.

(9) Electric gates shall be equipped with a means of opening the gate by Fire Department personnel for emergency access. Emergency opening devices shall be approved by the Fire Marshal.

(10) Manual opening gates shall not be locked with a padlock or a chain and padlock unless they are capable of being opened by means of forcible entry tools or when a key box is installed containing the keys to the lock.

(11) Locking device specifications shall be submitted to the Fire Marshal for approval.

(12) For all electronic gates, the HOA or private lane/gate owners shall apply for an annual gate permit and supply verification of yearly maintenance records with two phone numbers for responsible parties to the Fire Marshal.

(p) Bollards are prohibited within any public or private right-of-way, unless permission is granted by the Director and City Engineer based upon the need for restricted vehicle access and protection of fire hydrants.

(q) All streets are to be designed to serve as a Fire Department access road. Said roads shall not exceed 10% slope except as approved by the Fire Marshal and City Engineer. They cannot be varied less than 20 feet to 26 feet, as determined necessary by the Fire Marshal. To ensure access is maintained, roadways with less than 26 feet of width may be required by the Fire Marshal to have "No Parking, Fire Lane" signs. Roadways with widths between 26 feet and 32 feet may be required by the Fire Marshal to have the same signs on one side of street.

(LDC 2008, § 15A-21-10; Ord. No. 14-29, 9-28-2014)

Sec. 21-21-11. - Additional Standards for Private Streets/Lanes/Alleys/Pedestrian Mews.

(a) Public street systems shall be required for access to all residential dwellings, unless it is demonstrated by the developer that a public street cannot be constructed due to the following issues: property width, connectivity (or the inability to connect to the existing street patterns), topographical concerns, overall subdivision design, utility connections, and the ability to provide service, which includes, but is not limited to, snow plowing, street sweeping, trash collection and overall street maintenance.

(b) If a private street/lane/alley/pedestrian mew is allowed by the Planning Commission through a Special Exception, the private street/lane may not be counted toward the lots square footage to meet the minimum lot size of the zone. A Capital Reserve Study (as per the Condominium Ownership Act (U.C.A. 1953, § 57-8-1 et seq.) and the Community Association Act (U.C.A. 1953, § 57-8a-101 et seq.) will be required and a Reserve Fund shall be established for the Homeowners' Association, based on the study, so that the street is continually maintained as designed. Street maintenance, sweeping and snow/trash removal is the responsibility of the Homeowners' Association.

(c) A private street shall be designed and function similar to a public road. They shall provide frontage and access (guaranteed through a shared access easement) to each lot it serves. Either it must be designed to be owned commonly on its own parcel or the lots that front onto the street must own to the center of the road. Existing roads that provide access to legally subdivided lots, or lots of record, may be allowed to remain at current widths unless it does not meet current Fire Code standards. If it does not meet current fire standards, upon any new development application, the subject property will be required to comply with current development standards. The following regulations apply to all proposed new developments:

(1) Approved private streets for access to residential dwelling structures shall have a 27-foot minimum width paved surface (52-foot right-of-way). The Planning Commission may grant a special exception to allow less than a 27-foot pavement width, after considering a recommendation from the Director and City Engineer. They shall consider and evaluate the following criteria for a narrower pavement width:

a. Existing site conditions, topography, improvements, etc.;

b. Compliance with International Fire Code requirements and water availability;

c. Number of lots based on zoning;

d. Lot dimensions including frontage;

e. Flood control and storm drain;

f. Public utilities;

g. The proposal equitably balances the needs of the public and presents the most efficient use of land;

(h) The potential negative impacts created by the exception(s); and

(i) The cumulative effect of all the waivers and other exceptions requested for the development.

(2) Private streets shall have appropriate turn-arounds at the termini of the road as required by the Standard Specifications.

(3) A full-size fire apparatus must be able to negotiate the roadway without any backing maneuvers to the termini of the roadway. The applicant must demonstrate compliance through turn movement modeling software (using a vehicle type similar to that of a fire apparatus) that is approved by the City Engineer.

(4) Private streets that have less than 27 feet of pavement width shall not be obstructed in any manner, including the parking of vehicles. The minimum widths and clearances for fire access roads shall be maintained at all times. To ensure access is maintained, roadways with less than 26 feet of width shall have “No Parking, Fire Lane” signs at locations deemed appropriate by the Director and Fire Marshal.

(6) All private streets, including termini, shall be constructed in accordance with the latest edition of the Standard Specifications, the International Fire Code, this title, and all other applicable City ordinances.

(e) A private lane shall be utilized to provide access for up to two residential lots that do not have frontage to a public or private roadway. They shall be unnamed nor given a street coordinate. They shall be less than 150 feet in length, as measured from the top back of curb of the intersecting street to the edge of the pavement or required terminus of the lane.

(1) They shall have a 20-foot minimum width paved surface. A full size fire apparatus must be able to negotiate the roadway without any backing maneuvers to the termini of the roadway. The applicant must demonstrate compliance through turn movement modeling software that is approved by the City Engineer. (using a vehicle type similar to that of a fire apparatus).

(2) The Director, City Engineer, and Fire Marshal shall have the authority to require an increase in the minimum widths if:

a. They determine that a 20-foot width is inadequate for fire or fire rescue operations.

b. After consideration of the potential for vehicle congestion, condition of terrain, climactic conditions or other factors would limit access.

(3) Private lanes shall not be obstructed in any manner, including the parking of vehicles. The minimum widths and clearances shall be maintained at all times. Street maintenance, sweeping, and snow/trash removal is the responsibility of the lot owners which access the private lane.

(4) All private lanes shall be constructed to meet Public Utility Department requirements related to water and storm drainage.

(5) The Planning Commission may grant a special exception to exceed the length beyond 150 feet, after recommendation from the Director and City Engineer. These individuals will consider the following conditions when making a recommendation to the Planning Commission for approval of a longer private lane:

a. Proximity of buildable space;

b. Appropriately designed turn-around;

c. Slopes;

d. Fire hydrants; and

e. Service delivery

(6) All private lanes, including termini, shall be constructed in accordance with the latest edition of the Standard Specifications, this title, the International Fire Code, and all other applicable City ordinances.

(f) An alley may be utilized to provide rear access to a mixed-use or PUD development only, so long as the development has primary access to a public or private street or a pedestrian mew. The alley is meant to serve primarily as a utility and vehicle service corridor.

(1) An alley shall have a 20-foot minimum width paved surface for a one-way road, and shall have a 24-foot minimum paved surface for a two-way road. A full size fire apparatus must be able to negotiate the roadway without any backing maneuvers to the termini of the roadway. The applicant must demonstrate compliance through turn movement modeling software that is approved by the City Engineer. (using a vehicle type similar to that of a fire apparatus).

(2) The City Engineer and Fire Marshal shall have the authority to require an increase in the minimum widths if:

a. They determine that the width is inadequate for fire or fire rescue operations.

b. After consideration of the potential for vehicle congestion, condition of terrain, climactic conditions or other factors would that limit access.

(3) An alley shall not be obstructed in any manner, including the parking of vehicles. The minimum widths and clearances shall be maintained at all times. Maintenance, sweeping, and snow/trash removal is the responsibility of the lot owners which access the alley.

(4) All alleys shall be constructed to meet Public Utility Department requirements related to water and storm drainage.

(5) A structure shall be placed no closer than three feet to the alley.

(6) Access driveways to the alley shall be no more than three feet in depth to a garage. Alternatively, the driveway shall be a minimum 20-foot depth to allow for off street vehicle parking.

(g) A pedestrian mew may be utilized to provide primary building access and serve as building frontage to a mixed-use or PUD development only if the mew connects to a public or private street network. These shall be named and given coordinates like a street as they serve as the primary frontage to a building. These are to be used in conjunction with an alley or parking lot drive aisle to provide vehicular access to the development.

(LDC 2008, § 15A-21-11; Ord. No. 14-29, 9-28-2014)

Sec. 21-21-12. - Buffering Along Streets.

Residential developments shall not permit motor vehicle access directly onto an arterial street or roadway from individual residential lots. No new residential developments shall be permitted within the City, which abut an arterial without requiring improvements along the entire length of the development as it abuts the arterial street. The following standards shall apply:

(1) The Planning Commission may require a barrier wall six feet in height (measured from the highest elevation on either side of the wall). Where soil retention is required, walls may be up to eight feet in height (retaining wall and barrier wall combined). Wall design and coloration shall be determined by the Planning Commission. The use of alternative wall materials, appearance, and color is encouraged. Concrete strips placed at the base of the fence shall be required to eliminate gaps between walls and sidewalks.

(2) Curb, gutter, and sidewalk shall be designed to specifications approved by the City Engineer.

(3) A landscaped buffer between the sidewalk and street curb shall be installed according to Standard Specifications. In order to facilitate the planting of street trees, an eight-foot parkstrip and five-foot sidewalk is the standard requirement. Reduced parkstrip and sidewalk width may be approved based upon the size, scale, and nature of the project, and the type of existing

improvements on adjacent properties. However, a ten-foot cross-section (five-foot parkstrip, five-foot sidewalk) is a minimum and may necessitate tree planting behind the sidewalk.

(4) Sprinkling system and water connections sufficient to maintain landscaping in all buffer areas shall be approved by the Public Utilities Department and Parks and Recreation Department.

(5) An additional landscaped buffer, including sprinkling and water connections, may be required by the Planning Commission between the sidewalk and barrier wall, where it is impractical for the barrier wall to abut the sidewalk. The specific width of the buffer and landscaping specifications shall be determined by the Planning Commission upon recommendation by the Parks and Recreation Director at the time of subdivision review.

(LDC 2008, § 15A-21-12)

Sec. 21-21-14. - Block Length.

(a) The lengths, width, and shapes of blocks shall be determined by the following:

(1) Provision of adequate building sites suitable to the special needs of the type of use contemplated.

(2) Zoning requirements as to lot size and dimensions.

(3) Needs for convenient access, circulation, control, and safety of street traffic.

(4) Limitations and opportunities of topography.

(b) Block lengths shall not exceed 1,200 feet.

(c) Pedestrian crosswalks shall be required where deemed essential to provide circulation or access to churches, schools, playgrounds, shopping centers, transportation, and other community facilities in accordance with the Standard Specifications.

(LDC 2008, § 15A-21-14)

Sec. 21-21-16. - Walkways and Trails.

(a) Walkways and trails with a width of six to ten feet may be required within a subdivision. This will be determined on a case-by-case basis after review by the Director based on the City's approved Trails Master Plan.

(b) The developer may be required to dedicate a sufficient amount of property to be used exclusively as a pedestrian access walkway. Such parcels to be dedicated shall be located in a position within the development as may be determined by the Planning Commission. The parcel shall also be of a size large enough to allow for such a walkway, such size to be determined by the Planning Commission.

(c) The developer may be required to install upon the walkway such improvements as determined by the Planning Commission and the City Engineer. All such improvements shall be erected and constructed in accordance with standards as may be established by the Planning Commission and City Engineer.

(LDC 2008, § 15A-21-16)

Sec. 21-21-20. - Street Lighting.

(a) The developer shall follow the requirements as outlined in this Code.

(b) The street lights shall be placed as approved by the Public Utilities Director. Such items to be approved include appropriate distance, alternating sides of street, location upon the property, street light type, height, and illumination intensity as determined by the Standard Specifications.

(LDC 2008, § 15A-21-20)

Sec. 21-21-21. - Lots.

(a) Every parcel of land created by a subdivision shall comply with the minimum lot size requirements of this title and shall be platted as part of a subdivision. No parcel of land shall be created or left unplatted which is either undevelopable or serves merely as a nuisance or lot remnant.

(b) Except as may be otherwise provided in this title, all lots shall have the required frontage upon a dedicated and improved street. Exceptions may include the following:

(1) Residential building lots that do not have frontage upon a public street shall obtain a special exception from the Planning Commission as part of the preliminary review process.

(2) Commercial building lots within a recorded subdivision are exempt from this requirement. They may be developed without direct frontage upon a public street.

(c) Where a canal abuts a subdivision, the area or portion of the canal which is located in the lots shall not be included in the computation of total lot size nor side or rear yard setbacks for purposes of determining compliance with this title.

(d) All lot corners, points of curvature, tangency, and bearing changes shall be marked with permanent metal stakes approved by the City. The front corners of the lot shall be marked as per the Standard Specifications.

(e) Double frontage and reverse frontage lots shall be avoided except where essential to provide separation of residential development from traffic arteries or to overcome specific disadvantages of topography and orientation.

(f) Where possible, side lot lines shall be substantially at right angles to street lines.

(LDC 2008, § 15A-21-21)

Sec. 21-21-22. - Flag Lots.

In order to encourage the more efficient use of land, flag or L-shaped lots may be approved by the Planning Commission as a special exception (a permitted use within the Sensitive Area Overlay District) subject to the following criteria:

(1) A flag or L-shaped lot shall be comprised of a staff portion contiguous with the flag portion thereof.

(2) The staff portion of said lot shall be regulated as a private lane and shall front on and be contiguous to a dedicated public street or private street..

(3) No building or construction, except for driveways, shall be allowed on the staff portion of said lot, unless the minimum width thereof is the same or greater than the minimum width for a lot as allowed in the underlying zone (excluding entrance features and street lights).

(4) The front side of the flag portion of said lots shall be deemed to be that side nearest to the dedicated public street or private street upon which the staff portion fronts, unless otherwise determined by staff on a case-by-case basis.

(5) The staff portion of said lots shall be deemed to end, and the flag portion of said lots shall be deemed to commence at the extension of the front lot line.

(6) The square footage located in the flag portion of said lot, which shall be exclusive of the square footage located in the staff portion of said lot, shall be the same or greater than the minimum square footage as required in the underlying zone.

(7) The front, side and rear yard requirements of the flag portion of said lots shall be the same as is required in the underlying zone.

(8) No more than two flag lots can be served by the staff portion.

(9) The maximum number of flag lots in the subdivision shall be not more than 20 percent of the total number of lots within the subdivision, unless otherwise approved by the Planning

Commission. The Planning Commission may allow more than 20 percent if the subdivision is an infill development and the lot configuration is the most efficient use of land.

(10) The approved building envelope shall be illustrated upon the final plat.

(11) No flag lots shall be permitted at the end of an approved cul-de-sac or other private road terminus.

(12) Below is an example of a flag lot and is included herein to illustrate the concept of flag or L-shaped lots.

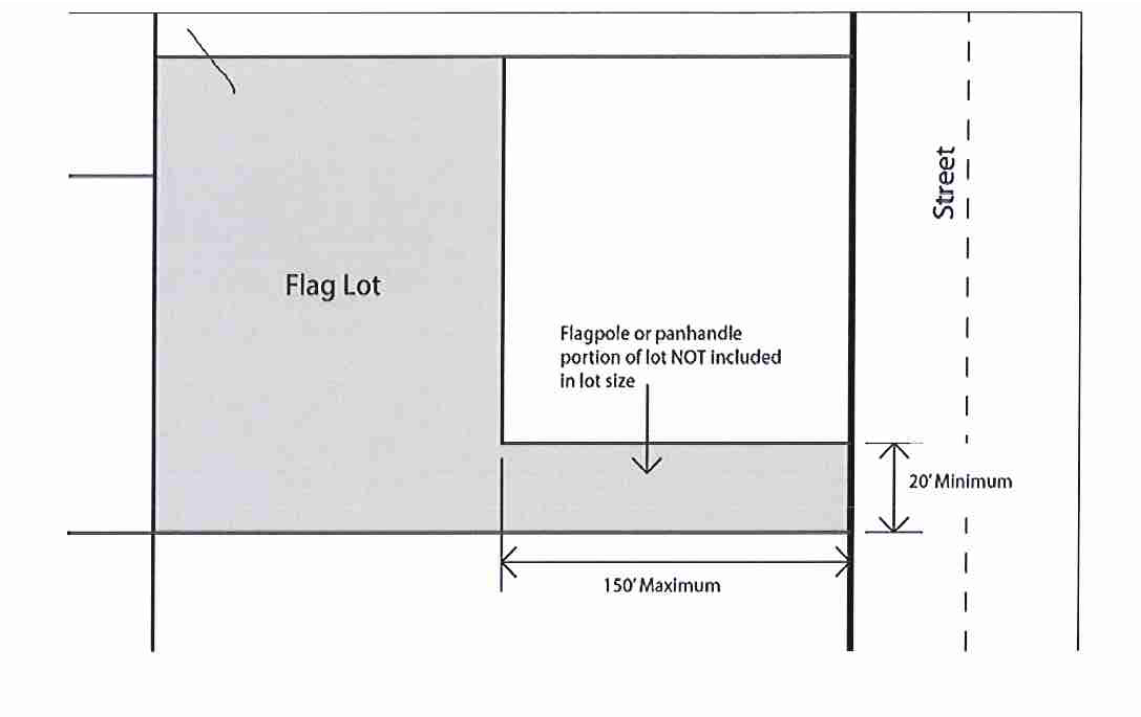

(LDC 2008, § 15A-21-22; Ord. No. 14-29, 9-28-2014)

Sec. 21-21-25. – Waivers and Special Exceptions.

Any waiver or special exception authorized by the Planning Commission as allowed in this title shall be shown on the final plat and the reasons for them shall be entered in writing in the minutes of the Planning Commission meeting.

(LDC 2008, § 15A-21-25)

CHAPTER 21-24. - PARKING, ACCESS AND CIRCULATION REQUIREMENTS

Sec. 21-24-1. - Purpose.

(a) These regulations are established to reduce street congestion and traffic hazards in Sandy City by incorporating adequate, attractively designed facilities for off-street parking as an integral part of every use of land in the City. These regulations are intended to complement any performance standards relating to development of parking lots as may be contained in other chapters of this title.

(b) This chapter also provides for vehicle ingress and egress, internal circulation, reciprocal access, and transportation demand management options within developments. Vehicular access and circulation must be properly designed so that the City street system will be able to accommodate traffic at an acceptable level of service. Thus, this chapter is intended to balance the right of reasonable access to private property with safe and efficient travel.

(c) Streets have been categorized in the Transportation Plan by function and classified for access purposes based upon their level of importance and function. Regulations have been applied to these roadways for the purpose of mitigating traffic demand and reducing traffic accidents, personal injury, and property damage attributable to access systems, and to thereby improve the safety and operation of the street network. These regulations further the orderly use of land, protect community character, provide universal pedestrian and bicycle access, and conserve natural resources by promoting well-designed road and access systems.

(LDC 2008, § 15A-24-01)

Sec. 21-24-2. - General Provisions.

(a) *General.*

(1) Minimum off-street parking space with adequate provision for ingress and egress by standard-sized vehicles shall be provided at the time of erection of any main building or at the time any main building is enlarged or increased in capacity. Exception: Those homes existing or constructed prior to February 1, 2008, shall be exempt from the requirement to enlarge their attached garage to meet the present standard.

(2) Parking areas shall be considered as structures since they represent a three-dimensional appearance when occupied. Parking shall be designed as outdoor rooms promoting maintenance and ownership.

(b) *Parking Space Size.*

(1) All parallel parking spaces shall be a minimum of nine feet wide by 22 feet long, as designated on the diagram in this chapter.

(2) All parking spaces (not including parallel spaces) shall be a minimum of nine feet wide by 20 feet long, as designated on the diagram in this chapter.

(3) Parking spaces (not including parallel spaces) may be reduced to 18 feet in depth based upon the following exceptions:

a. Where cars overhang landscape areas that are at least 15 feet wide along street frontages;

Reduction for Landscape Buffer

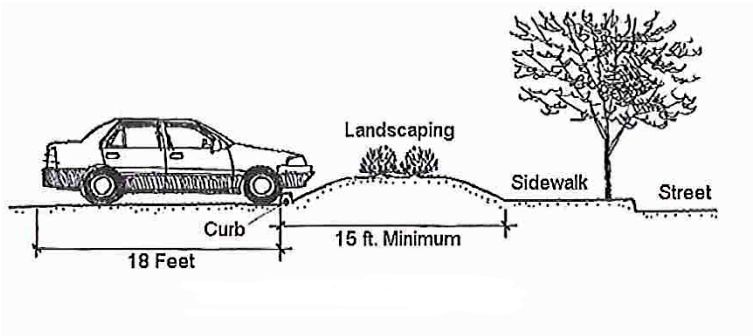

b. Where cars overhang landscape areas that are at least five feet wide along a side or rear property line or adjacent to an interior parking lot landscape area that is at least ten feet wide (for double loaded parking). In order to encourage low impact development standards, double loaded parking may be built with 18 foot stalls and a four foot landscaped area in between.;

Reduction for Planter Overhangs

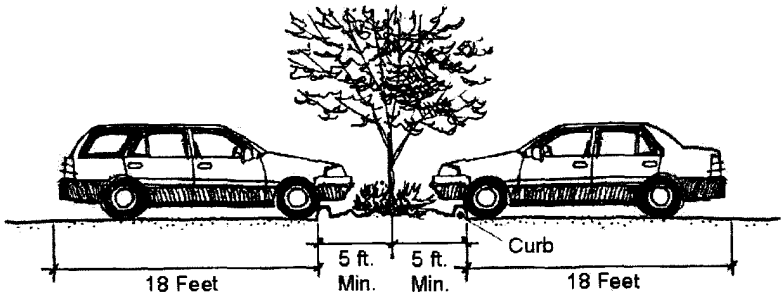

c. Where cars overhang a sidewalk on private property where the sidewalk is at least six feet in width; or

Reduction for Sidewalk Overhang

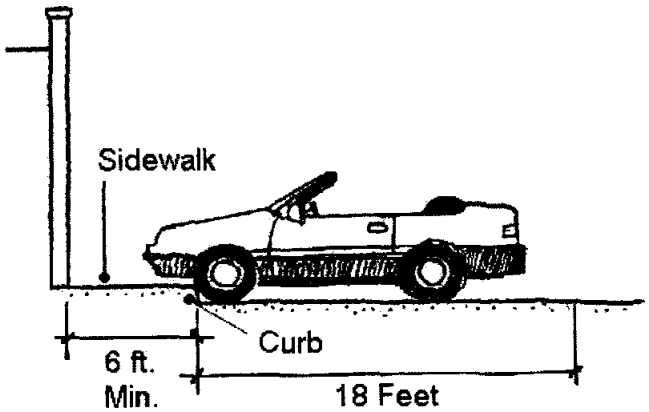

d. 90-degree parking within a parking structure.

(4) The minimum garage size for residential development shall be as follows:

Type of Garage	Minimum Width	Minimum Depth	Minimum Square Footage
Single	12 ft.	20 ft.	240 sq. ft.
Double	20 ft.	20 ft.	400 sq. ft.
Triple	30 ft.	20 ft.	600 sq. ft.
Note: These dimensions are to be administered from the interior of the garage. No encroachments (i.e. stairs, doors, etc.) are allowed within these minimum areas.			

(c) *Floor Area Defined.* For the purposes of parking requirements, floor area shall be defined as the gross square footage of the building.

(LDC 2008, § 15A-24-02; Ord. No. 14-06, 4-23-2014)

Sec. 21-24-3. - Special Access and Parking Provisions.

(a) *Alternative to On-Site Parking.*

(1) *Off-Site Parking.* Off-site parking may be allowed for the required parking of any new use, structure, or building in any commercial or RM District that cannot be provided on the premises due to the property's size or location according to the following criteria:

a. The off-site parking must be located on other appropriately zoned property.

b. The off-site parking cannot be more than 300 feet of walking distance from the nearest point of the parcel.

c. The adjacent site has excess parking that is not required for their use, or the hours parking is needed will not conflict with the hours of use on the adjacent property.

d. The applicant shall provide a document to the Community Development Department, signed by the owners of the alternate site and recorded at the Salt Lake County Recorder's Office, that stipulates the permanent reservation of use of the site for said parking.

(2) *Temporary Off-Site Event Parking.*

a. Temporary off-site parking for events may be allowed after review and approval of a Parking and Access Management Plan by the Planning Commission at a public meeting. Temporary parking is parking established for a fixed period of time with the intent to discontinue such parking upon the expiration of the time period. An occasional event with an expected attendance of less than 500 persons or if the event does not occur more than once a year shall not be subject to the requirements of this section.

b. The applicant will be responsible to make provisions for on- and off-site parking, safe pedestrian routes to and from the off-site parking, transportation to and from off-site parking locations beyond a 5,000-foot (approximately 15 minutes) walking route, entry and exiting methods, temporary or permanent traffic control methods, and restricting parking in identified areas.

c. The Parking and Access Management Plan must be approved prior to the issuance of a temporary use permit, business license or Certificate of Occupancy required for the event, project, or use. Upon approval, the Parking and Access Management Plan shall be available

for public inspection. All approved updates of a Parking and Access Management Plan shall be available for public inspection.

d. The applicant may be responsible to post a guarantee for improvements and implementation of various components of the Parking and Access Management Plan.

e. The Parking and Access Management Plan shall be submitted with the application for the project or use and shall:

1. Determine the total number of parking spaces required based upon the land use category less any anticipated mass transit use projection, which may be limited to 15 percent of the total number of required parking spaces unless greater mass transit use is demonstrated.

2. Establish the minimum number of on-site spaces that are required. Specify the number of those on-site spaces that will be reserved for or utilized by employees, VIPs, buses, media, etc.

3. Establish the minimum number of off-site spaces, if any, that are required within a 1,650-foot (approximately five minutes) walking route of the site.

4. Establish the minimum number of off-site parking spaces, if any, that are required within a 5,000-foot (approximately 15 minutes) walking route of the site.

5. Establish the minimum number of off-site parking spaces, if any, that are required beyond the 5,000-foot (approximately 15 minutes) walking route of the site.

6. Identify all off-site parking sites potentially available to be used for Subsections (a)(2)e.3 through 5 of this section. Identify methods that the applicant will provide for safe pedestrian routes to and from the parking sites satisfying Subsections (a)(2)e.3 and 4 of this section (e.g., wider sidewalks, trails, bridges, permanent or temporary traffic control devices, individuals directing traffic, etc.), and methods to provide transportation to and from those sites satisfying Subsection (a)(2)e.5 of this section (e.g., Trax, UTA buses, shuttle buses, etc.), and provide a timeline for the implementation of the identified methods. Each potential off-site parking location shall conform to the parking area development and maintenance requirements in this section.

7. Identify neighborhoods and other areas that will specifically not be allowed to be part of the calculation of available parking spaces or will be subject to parking restrictions during the event. Identify measures that the applicant will implement to prevent parking within restricted areas (e.g., signage, security personnel, proposed new parking regulations, etc.), and provide a timeline for the implementation of the identified methods.

8. Identify pedestrian exit times and volumes to on-site and off-site parking areas. Identify methods that the applicant will implement to manage the projected volume expeditiously and safely (e.g., wider sidewalks, temporary or permanent traffic control methods, etc.), and provide a timeline for the implementation of the identified methods.

9. Include a Traffic Study presenting traffic counts, times and circulation patterns for a geographic area encompassing all potential off-site parking sites if required by the City Engineer. If required, the Traffic Study shall also present the projected impact of the event on existing traffic counts, times and circulation patterns.

10. Identify the methods the applicant will implement, on vacant or unimproved lots, to control the dust and debris.

11. Identify any permits or approvals necessary from other transportation agencies with jurisdiction over roads or streets affected by the temporary or permanent traffic control measures identified in Subsections (a)(2)e.7 through 9 of this section.

12. Specify a date by which the applicant must provide the Planning Commission with evidence of availability of off-site parking spaces, safe pedestrian routes, transportation

services, measures to prevent parking in restricted areas, and measures to manage entry and exit times and volumes of pedestrians and vehicles.

13. Indicate the time period for which the Parking and Access Management Plan will be in effect.

14. Be updated on a yearly basis or as otherwise required by the Planning Commission after the project or event has commenced operation. The Planning Commission shall hold at least one public meeting prior to the approval of any updated Parking and Access Management Plan.

(b) *Parking Increase.* Developments are required to provide a certain number of parking stalls, as determined by this title, based on the land uses associated with the site. In some cases, it may be appropriate to allow for more than the required parking. At the time of site plan review, a Parking Plan shall be submitted showing all parking spaces, the overall circulation system, and justification for requesting increases in parking space requirements as specified below:

(1) *Increase up to Ten Percent.* The Director may approve an increase of up to ten percent of the amount of required parking upon review of one or more of the following that justifies the request:

a. *Parking Demand Analysis.* A study provided by a licensed transportation engineer that demonstrates actual usage of employees and customers of the proposed land use or similarly situated land uses in other locations.

b. *Market Demand Analysis.* A study provided by a licensed real estate professional or real estate financial professional that provides estimates of current market demand for a particular land use.

(2) *Increase above Ten Percent.* The Planning Commission may approve an increase of up to 25 percent of the amount of required parking upon review of the criteria listed in Subsection (b)(1) of this section. The Planning Commission may approve a request to increase the amount of parking provided beyond the 25 percent increase of required parking if the additional parking is sited within a parking structure that meets the following criteria:

a. The parking structure contains at least 90 percent or more of the total proposed parking stalls of the development; and

b. The footprint of the parking structure consumes no more than 50 percent of the above grade total site area, is contained within the proposed building footprint, or is completely underground; and

c. The parking structure contains at least three levels; and

d. The parking structure does not exceed the height of the surrounding buildings within the site.

(c) *Parking Reduction.* Developments are required to provide a certain number of parking stalls, as determined by this title, based on the land uses associated with the site. In some cases, it may be appropriate to allow for less than the required amount of parking. At the time of site plan review, a Parking Plan shall be submitted showing all proposed parking spaces, the overall circulation system, and justification for requesting reductions in parking space requirements as specified below:

(1) *Reduction up to Ten Percent.* The Director may approve a reduction of up to ten percent of the amount of required parking upon satisfactory review of one or more of the following that applies to the request:

a. *Parking Demand Analysis.* A study provided by a licensed transportation engineer that demonstrates projected usage of residents, employees, and customers of the proposed land uses or similarly situated land uses in other locations.

b. *Market Demand Analysis.* A study provided by a qualified real estate market analyst that estimate current market demand for a particular land use. For the purpose of this section, a real estate analyst shall be defined as a real estate professional with expertise in financial

analysis in support to the financing, acquisition, marketing and leasing of real property based on the study of economic conditions and market trends.

c. *Walkability and Multi-Modal Design.* Provide a site plan design that demonstrates walkable elements and promotes multiple modes of transportation. A study by a licensed transportation engineer shall provide a quantitative analysis of the anticipated parking demand and automobile trips based on the proposed design.

d. *Proximity to Transit.* A site that is within a half-mile ADA route distance of existing or immediately planned local fixed mass transit station that would help reduce the number of needed parking stalls and automobile trips.

e. Low to Moderate Income Housing. A housing development that is proposing to set aside at least 20% of their units for residents that qualify for at least 80% low to moderate income.

(2) *Reduction above Ten Percent.* The Planning Commission may approve a reduction above ten percent of the amount of required parking. Upon satisfactory review of two or more of the criteria listed in subsection (b)(1) of this section, they may approve up to a 15 percent reduction. Upon satisfactory review of three or more of those criteria, they may approve up to a 20 percent reduction. Upon satisfactory review of four or more of those criteria, they may approve up to a 25 percent reduction.

a. No parking reduction shall be applied to any detached single-family housing development within the city limits.

(3) *Residential Parking Reduction.* If a reduction to any parking requirement is granted for a residential development, it shall be required of the developer/owner to provide a minimum of one stall to each residential unit and include it in the base sale or lease price of the unit.

(4) *Amendments.* Any amendments to the approved site plan or change in land use will cause any previously approved parking reductions for the site to be reviewed again by the appropriate authority and ensure that the required justification requirements have been met.

(c) *Shared Parking.*

(1) *Shared Parking Proposal.* Notwithstanding any other parking requirements provided in this chapter, when land uses occupy the same lot or adjacent lots, the total number of off-street parking spaces required for each use may be combined and shared. A proposal for sharing off-street parking shall be presented to the Director. If the proposal involves the accommodation of more than ten parking spaces (total accumulated spaces required for all involved uses), the Director may present the proposal to the Planning Commission for site plan review.

(2) *Requirements.* In order to qualify for approval for shared parking, applicants shall present the following:

a. The location and identity of each use that will share the facility.

b. The total parking requirement for each use.

c. The projected hours of operation of each use and the hours during which the peak parking demand will be experienced.

d. The number of existing and/or proposed parking spaces.

e. A site plan that provides for a distance of no greater than 500 feet from the nearest entrance of each use to the nearest edge of the parking facility.

f. A site plan that demonstrates that the proposed shared parking facility will comply with all standards required by this title for parking lot development.

(d) *Drive-Thru Business Stacking Space.* (See Chapter 21-23, Commercial, Office, Industrial, and Transit Corridor Development Standards.)

(e) *Excessive Parking.* Developments shall not have parking in excess of that required by this title without prior approval of the Director or Planning Commission, upon written justification of the specific need for more parking spaces than the provisions of this title allows. In addition, developers are encouraged to work out shared parking agreements with adjacent users wherever possible according to the provisions for shared parking contained within this title.

(f) *Prohibited Parking.* No parking shall occur in any alley, driveway, service driveway, traffic aisle (either public or ways open to the public), delivery area (other than for a minimal period of time needed for the delivery of goods and materials to a specific tenant) or other location designed for through traffic unless:

(1) Said area has been specifically designated for parking on the original approved site plan; or

(2) The original site plan has been specifically modified by written approval of the City Engineer, for parking space use; and

(3) Be designed in accordance with the parking designs specified in this chapter.

(LDC 2008, § 15A-24-03; Ord. No. 18-18 , § 1, 6-28-2018; Ord. No. 18-26 , § 1(15A-24-03), 9-20-2018)

Sec. 21-24-8. - Parking Space Requirements.

(a) *Specific Requirement for Each Land Use.* Off-street parking shall be provided for land uses as described below. Parking for uses not specifically listed below shall be provided in the same ratio as the use most nearly approximating the characteristics of the unlisted use, as determined by the Planning Commission. Land uses are grouped into categories that have comparable parking requirements.

(b) *Table of Parking Requirements by Land Use Category.* The following minimum parking is required:

Parking Requirements by Land Use Category

Land Use Categories	Space Requirements
Residential, single-family detached and attached	
Dwelling, single-family	2 spaces per dwelling unit (within an enclosed garage)
Dwelling, duplex	2 spaces per dwelling unit
Dwelling, multiple-unit (tri-plex, four-plex, and five-plex)	2 spaces per dwelling unit
-guest parking	2-car off-street parking in the dwelling's driveway is required. Alternatively 0.25 spaces per unit after a base of 1 per unit for the first 5 units if provided in an off-street parking lot.
Dwelling, multiple-unit (apartments or stacked condominiums)	
-one-bedroom unit	1.5 spaces per unit
-two-bedroom unit	2.0 spaces per unit
-three or more bedroom unit	2.5 spaces per unit
-guest parking	0.25 spaces per unit after a base of 1 per unit for the first 5 units in an off-street parking lot
NOTE: There shall be no less than 1.5 covered parking spaces (1.0 carports. 0.5 garages) per unit for single-family attached and multiple unit dwellings. Garages shall only be used for the parking of vehicles and cannot be used as storage facilities.	

Assisted living center, nursing home, convalescent home and other similar uses as determined by the planning Commission upon review.	0.5 spaces per bed, plus 10% for support staff/physicians, plus a bus only parking stall to meet the dimensions of a handicap parking stall
Senior or elderly housing	1 space per unit (The completed parking ratio may be reduced to one space per unit for any congregate care facility, provided that adequate space is created and landscaped that can be converted to additional parking stalls to comply with the minimum standards as set forth for Planned Unit Developments. The area that is held in reserve for additional parking shall not be located within a required landscape setback area, and shall not be used in the calculations for any required landscaping or open space coverage percentage.)
Retail Commercial	
Automotive repair (service bays are not included in the required number of required parking spaces)	5 spaces per 1,000 sq. ft.
Commercial retail sales and services**	
Heavy commercial	
Commercial center, community	
Commercial center, convenience	
Commercial center, neighborhood	
Commercial center, regional	
Liquor sales	
Exceptions: **Reduction may be allowed by the Planning Commission for retail businesses with exceptionally large show room floor space per volume of sales (e.g., furniture store at a ratio of 3 spaces per 1,000 sq. ft.)	
Commercial Services, Offices	
Bar, tavern, club	3.5 spaces per 1,000 sq. ft.
Business or financial services	4.0 spaces per 1,000 sq. ft.
Dance hall, discotheque	3.5 spaces per 1,000 sq. ft.
Day care, group	One space for each instructor (plus drop-off space)
Veterinary office	4 spaces for each practitioner
Medical and health care	5 spaces per 1,000 square feet OR 4 spaces for each practitioner plus 1 space per employee (including practitioner) at highest shift, whichever is greater. For the purpose of the parking ratio. Employees include nursing staff, receptionist, rehabilitation specialists, and dental assistants. Site plan shall be reviewed to verify compliance with this standard upon application of business license. Business License shall be denied if adequate parking is unavailable.

Motel, hotel	1 space per rental unit, 1 space for each 200 sq. ft. of assembly, conference space, banquet, sit-down restaurant facility and office space
Recreation, Indoor	
Bowling center	5 spaces per lane
Movie theater	1 space per 4 seats
Skating rink	3 spaces per 1,000 sq. ft. of skating area
Restaurants	
Restaurant—sit down	1 space per 3 seats (including outdoor seating) plus 0.5 space per number of employees on the largest shift (minimum of 5 employee spaces)
Restaurant—drive-in/drive thru (all fast food outlets with large proportion of take-out and/or drive-in service.)	1 space per 100 sq. ft. of floor area. Required parking spaces do not include spaces required in drive thru lanes).
Public Uses	
Hospital	2 spaces per bed
Rehabilitation center	0.5 space per bed
School, private or quasi-public	As determined by Planning Commission review
School, public	As determined by Planning Commission review
Elementary and middle school	1 space per teacher and staff plus 1 space per 2 classrooms.
Senior high school	1 space per teacher and staff plus 1 space per 5 non-bussed students.
Religious or cultural activity	1 space per 4 seats
Theater or concert hall	1 space per 4 seats
Industry	
Industry, light and medium	1 space per 1,000 sq. ft. of gross floor area
Warehouse, wholesale, storage	1 space per 1,000 sq. ft. of storage space
Special Review	
Athletic, tennis or health centers	Specific off-street parking shall be determined by the Planning Commission.
Auto, truck, R.V. and equipment sales and storage	
Cemetery, columbarium, mausoleum	
Golf course	
Park (active and passive)	
Recreation center	
Recreation, outdoor	

(LDC 2008, § 15A-24-08; Ord. No. 10-26, 7-30-2010)

Sec. 21-24-9. - Parking Structure Design Standards.

(a) *Setbacks.* The parking structure shall comply with the minimum requirements, including all height adjustments for stepped buildings.

(b) *Maximum Height.* The parking structure shall comply with all height requirements, including the stepping back of the additional stories above grade.

(c) *Parking Stall Size Requirements.*

(1) Ninety-degree stalls within parking structures shall be a minimum of nine feet wide by 18 feet long. Drive aisle dimensions and all other angled parking shall be designed according to the specifications listed within the chapter.

(2) Signage shall be installed on parking structures to discourage the parking of oversized vehicles.

(d) *Parking Structure Appearance Requirements.* Parking structures shall be designed to complement adjacent non-parking structures and blend in with the local manmade or natural environment. If adjacent to an existing or future office building and the facility is adjacent to a right-of-way, the parking structure shall be designed to appear as an office building with simulated window openings and doors, unless otherwise approved by the Planning Commission. Exterior elements shall use at least one of the following materials: embossed concrete, polished masonry, colored glass, and/or brick. Stucco shall not cover more than 20 percent of the hard vertical surface area. Stucco may only be used if approved by the Planning Commission after determination that the material blends with the adjacent manmade or natural environment and is used in an architecturally pleasing manner (such as quoins, pediments, etc.).

(e) *Landscaping.* The parking structure shall be landscaped at the base of the facility with trees and shrubs, along with other materials that will de-emphasize the use of the facility as a parking structure. It is strongly encouraged, but not required, to landscape the top level with trees, grass, and other pedestrian-friendly elements.

(LDC 2008, § 15A-24-09; Ord. No. 14-06, 4-23-2014)

Sec. 21-24-10. - Parking Stall Dimensions. Drive aisle widths shown below are minimums. If the drive aisle is determined to be a fire access road, this code and the International Fire Code may require additional width.

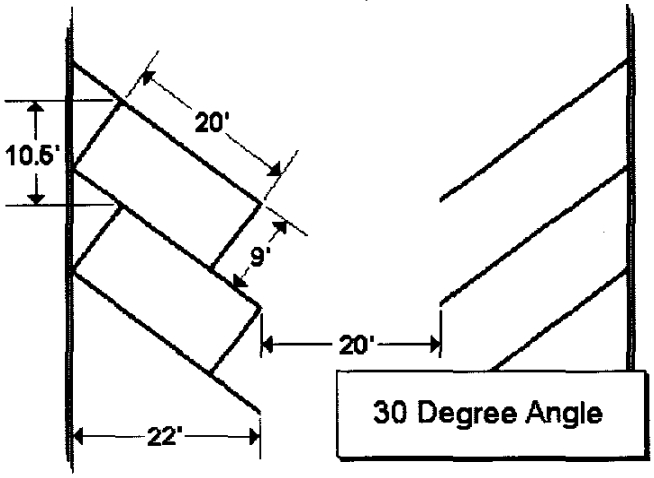

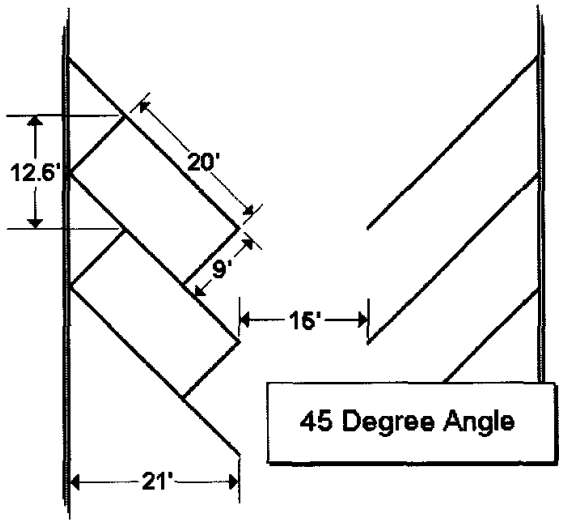
12.6'
20'
9'
16'
21'
45 Degree Angle

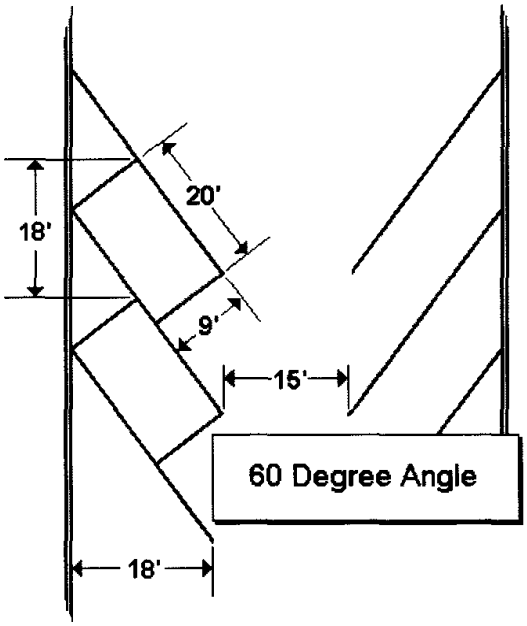
18'
20'
9'
15'
18'
60 Degree Angle

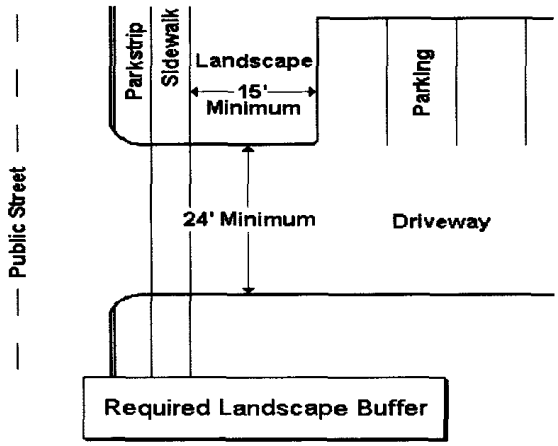
Public Street
Parkstrip
Sidewalk
Landscape
15'
Minimum
Parking
24' Minimum
Driveway
Required Landscape Buffer

(LDC 2008, § 15A-24-10)

Sec. 21-24-11. - City Approval of Access Required.

Access to a public street requires approval by the Public Works Director based on the standards contained in this title and the Sandy City Standard Specifications and Details for Municipal Construction.

(LDC 2008, § 15A-24-11)

Sec. 21-24-12. - Traffic Impact Analysis.

The City may require a traffic impact analysis prepared by a registered engineer to determine access, circulation, transportation demand management, and other reasonable transportation system mitigation requirements.

(LDC 2008, § 15A-24-12)

Sec. 21-24-13. - Access; Ingress and Egress.

(a) *Ingress and Egress.* All parking areas shall be designed to provide ingress and egress from a public street by forward motion of the vehicle. Single-family developments are exempt from this requirement.

(b) *Paved Access.* All off-street parking areas shall have access to a public street by means of a paved driveway that extends no less than 15 feet from the public right-of-way to the nearest parking area and/or driveway access to parking spaces. No parking space shall be located within the first 15 feet of a driveway. Single-family developments are exempt from this requirement.

(c) *Entry/Guardhouse Gateways.* Where an entry gate or guardhouse controls vehicle access or egress, a stacking lane shall be provided as required by the City Engineer. The stacking lane shall not interfere with maneuvering, traffic flow of aisles, streets, bike paths, parking spaces, and sidewalks.

(d) *Unobstructed Access.* Unobstructed and direct driveways shall be provided from commercial off-street parking or loading facilities to a street or alley. Loading driveways may coincide with driveways to parking facilities.

(LDC 2008, § 15A-24-13)

Sec. 21-24-14. - Access and Maneuvering for Fire and Refuse Trucks.

Parking lots shall include the necessary dimensions for the on-site maneuvering of refuse vehicles and fire trucks, as determined by the City Engineer and Fire Marshal. A 20 to 26-foot-wide, unobstructed driveway, lane, or other access way and turn-around may be required for this purpose, as required in the International Fire Code. No off-site maneuvering is permitted.

(LDC 2008, § 15A-24-14)

Sec. 21-24-15. - Driveway Access; General Standards.

(a) *Determination of Necessity.* In establishing permissible curb openings and sidewalk or driveway crossings for access to private property, such curb openings or driveways shall not be authorized where they are unnecessary or where they would interfere with the movement of vehicular traffic, with public improvements, or with the rights of the public in the adjacent street or alley. In no case shall any curb opening be of greater width than necessary for reasonable access to the property to be served.

(b) *Width of Curb Openings.* In determining the width of curb openings and spacing of driveways, the end transitions in each case will not be considered a part of the width of the curb opening. The curb opening or width of each driveway shall be defined as the throat width of the driveway at the inside point of the curb transition radius at the top face of the curb.

(c) *Number of Curb Openings.* Only one driveway opening per street frontage/per parcel shall be allowed unless a capacity or safety need for more than one driveway opening can be demonstrated to the City Engineer. This may be determined on a case-by-case basis.

(d) *Reciprocal/Shared Access.* Where nonresidential uses share a property line, off-street parking lots serving the properties shall be made accessible to each other unless grade differences or building locations make reciprocal access between developments impractical.

(e) *Single-Family Residential.*

(1) Minimum separation from driveways, measured from edge of driveway to edge of driveway at back of sidewalk, is 30 feet for multiple drive approaches along the same parcel.

(2) No circular driveway that cuts across corner lots to access two separate streets is allowed.

(3) No driveway will be permitted within 30 feet of an ADA ramp as measured from the edge of driveway to the edge of the ADA ramp at the back of sidewalk.

(LDC 2008, § 15A-24-15)

Sec. 21-24-16. - Driveway Separations.

(a) *Frontage on Arterial (106 feet plus) or Major Collector Streets (80 Feet Plus).* Uses, other than single-family dwellings, on parcels with less than 150 feet of frontage shall be required to share a common driveway in order to assure that a minimum of 170 feet of continuous curb and gutter exists from the throat of one driveway to the throat of the next adjacent driveway. Driveways offset less than 170 feet from existing driveways, approved driveways, or existing public streets on the opposite side of the street shall not be allowed unless the City Engineer determines that an unacceptable capacity or safety impact will not result.

(b) *Frontage on Minor Collector (60 feet or 66 feet) or Local Streets (50 Feet Plus).* Uses with less than 70 feet of frontage shall be required to share a common driveway in order to assure that a minimum of 90 feet of continuous curb and gutter exists from the throat of one driveway to the throat of the next adjacent driveway. Driveways offset less than 170 feet from existing or approved driveways on the opposite side of the street shall not be allowed unless the City Engineer determines that an unacceptable capacity or safety impact will not result. Single-family developments are exempt from this requirement.

(c) *Driveways Adjacent to Intersections.* The minimum distance from the intersection to the nearest driveway shall be according to the following intersection illustration and distance table. (Distances are measured from the back of curb to the throat of the nearest edge of the driveway.)

Driveway Clearance Distances

	Median Barrier Present	Arterial	Major Collector	Minor Collector
Driveway clearance	No	200 feet	175 feet	50 feet
Driveway clearance	Yes	185 feet	115 feet	50 feet

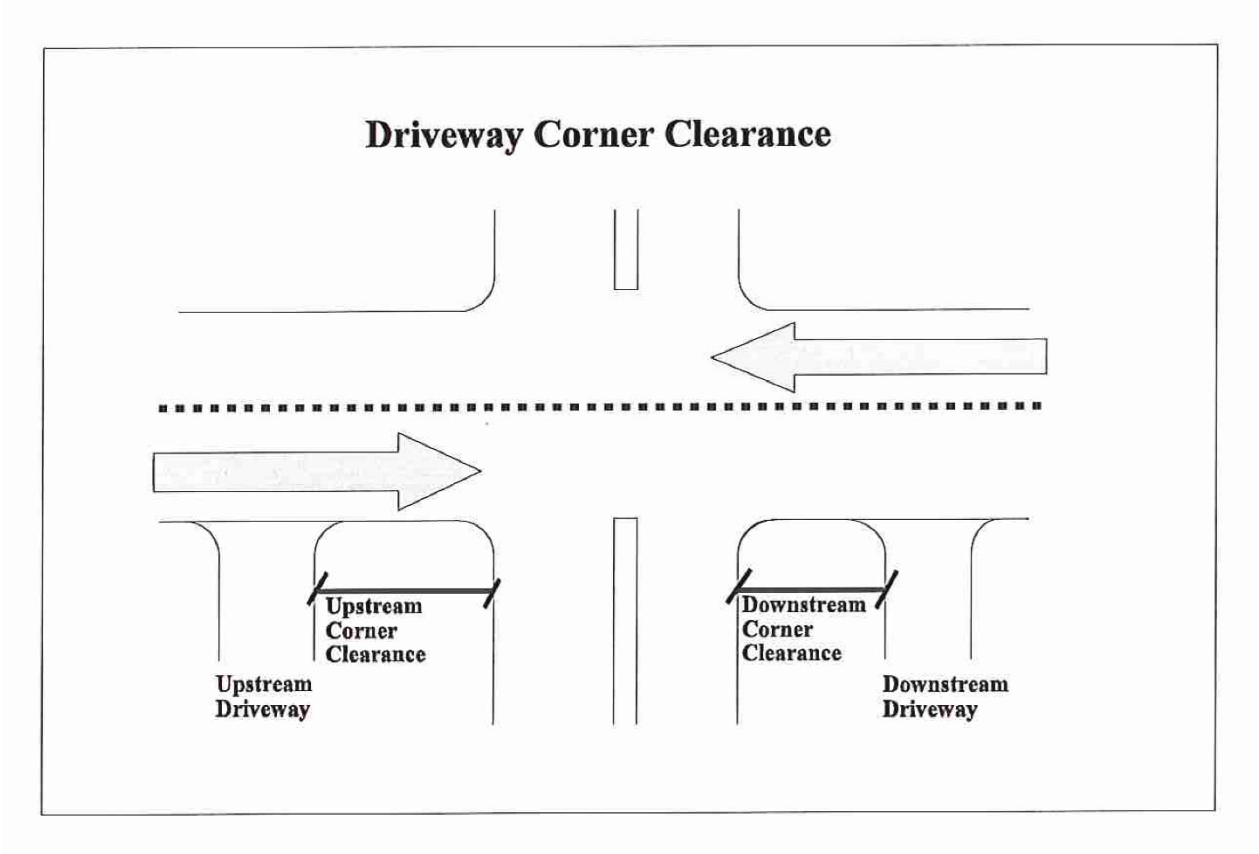

(d) *Deviations to Driveway Separation.* The City Engineer shall review and may approve or deny deviations to the above standards based upon a site visit and review of items, including, but not limited to:

(1) Safety.

(2) Alternative access points and potential for reciprocal/shared access.

(3) Sight lines.

(4) Impact on traffic flow.

(LDC 2008, § 15A-24-16)

Sec. 21-24-17. - Driveways; Widths and Curb Designs; Non-Single-Family Residential Developments.

(a) *One-Way.*

(1) One-way driveways shall be not less than 12 feet, nor more than 24 feet in width. A wider one-way driveway may be required by the Sandy City Fire Marshal.

(2) Exception: No two complementary one-way driveways may total more than 45 feet in width.

(b) *Two-Way.*

(1) Two-way driveway approaches shall be not less than 24 feet, nor more than 36 feet in width. In determining the width of curb openings and spacing of driveways, the end transitions in each case will not be considered a part of the width of the curb opening. A wider driveway may be required by the Sandy City Fire Marshal.

(2) Wherever a common driveway is constructed serving two or more properties, the common curb opening shall have a maximum width of 36 feet.

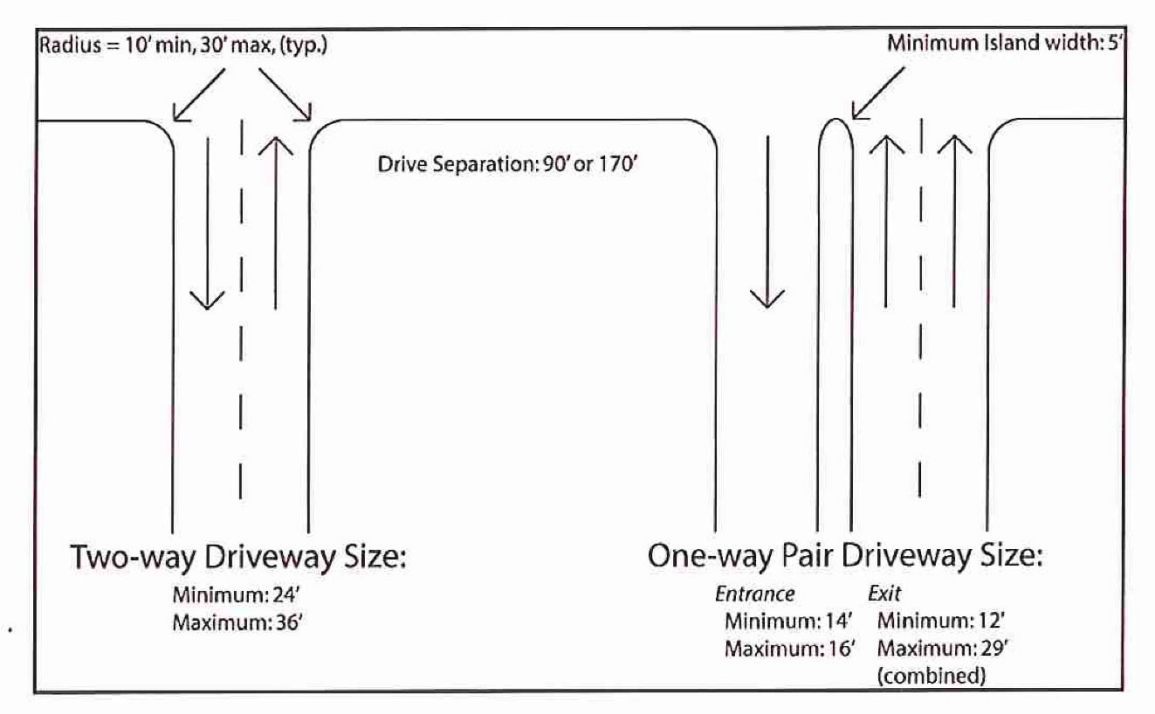

(3) The City Engineer shall review and may approve or deny deviations to the above driveway width standards based upon review of the site and land use, along with impact on streets and neighbors.

(c) *Drive Approaches.* All driveway approaches shall be constructed with curb radii and provide for handicap access.

(1) *Minimum Curb Radius.* All drive approaches shall have a minimum end transition (curb radius) of ten feet and a maximum of 30 feet. If the driveway is to be used for delivery truck traffic, the minimum curb radius shall be 25 feet.

(2) *Driveways.* Driveways shall be located a minimum of five feet from the property line, measured from the throat of the driveway. This does not apply to property lines where a shared driveway is proposed.

(3) *One-Way Paired Driveways.* Where a driveway is of the split, one-way paired directional type, there shall be a raised landscaped island of at least five feet in width between the two driveways. The size of the entrance shall have a minimum of 14 feet and a maximum of 16 feet. The exit lanes shall be a minimum of 12 feet and a maximum of 29 feet (combined).

(4) *Maximum Curb Opening Coverage.* The total width of all curb openings shall not exceed 40 percent of a project's frontage. For corner lots, the total width of all curb openings shall not exceed 30 percent of the combined frontages.

(5) *Vehicle Encroachment.* No curb opening will be approved that allows vehicle encroachment on any portion of a street right-of-way for loading, unloading, or standing.

(6) *Drainage.* Curb openings and driveways shall be paved and shall provide for adequate drainage.

(7) *Drive Angle to Right-of-Way.* All driveways shall intersect the street at a 90-degree angle to a distance at least 15 feet from the property line.

(LDC 2008, § 15A-24-17)

CHAPTER 21-37. - DEFINITIONS

Sec. 21-37-2. - "A" Definitions.

(13) *Alley* means a public or private roadway that provides a rear or side access vehicular access and a corridor for utilities and services to abutting property not intended for general traffic circulation.

Sec. 21-37-17. - "P" Definitions.

(12) *Pedestrian mew* means a public or privately owned pedestrian oriented corridor that serves a similar purpose of a street that provides frontage and public access to properties, but restricts vehicular use. These corridors are designed at a pedestrian scale consisting of an inviting walkway, landscape, and other pedestrian amenities and furnishings lined with building on either side (also known as a block break).